Zoning and Building Department

TOWN OF HOPEWELL
2716 County Road #47
Canandaigua, New York 14424
585-394-3850 ext. 4

Permit Application for Decks & Porches

- This Application must be filled out completely and submitted to the building department.
- The permit will be issued when all review notes are addressed, insurances are on file, and permit fees are paid

Application Checklist

Incomplete applications will not be accepted

☐ Completed Application ☐ Plot plan showing proposed work ☐ Insurance

☐ Completed work sheet ☐ Drawing of proposed work

Address of Job Site_____ Work Start Date_____

Estimated Value of Work_____ Estimated End Date_____

Size (in sq. ft.): _____ Deck/Porch Dimensions _____X_____

Applicant's Name_____ Best phone #_____

Applicant's Address_____

Applicant's Email_____

Owner's Name_____ Best phone #_____

Owner's Address_____

Owner's Email_____

Contractor's Name_____ Best phone #_____

Contractor's Address_____

Contractor's Email_____

PLEASE DOUBLE CHECK EMAIL ADDRESSES.

The Applicant Shall, as part of this application, agree to:

- Notify the Building Department of any change in the information contained in the application or approved plans and specifications.
- Prominently display on the premises the building permit issued and authorize the inspector access for the purpose of inspections during construction.
- Not use any portion of the project, in whole or in part, until the structure meets all applicable codes, conditions, all inspections have been made, approvals granted and a certificate of compliance has been issued.
- Abide by Planning Board, Zoning Board of Appeals, Town Board approval resolutions, if required, and all plan amendments made by the Building Department.
- At the time of the issuance of a permit, a copy of approved plans will be kept at the work site, available for inspection throughout the progress of the work.
- Work may NOT Commence prior to the issuance of a building permit.
- Must Notify the Building Department 24 hours in advance for all required inspections and must receive approval before any building element, equipment, or system is covered or enclosed.

Acceptance does not relieve the agent, applicant, architect, builder, engineer, or owner from complying with any of the provisions of the NYS Building Code, Energy Code, SEQR Act, Local Zoning, etc., whether stated, implied, or omitted in the plans and specifications submitted for the building permit. Incorrect information may result in revocation of permit.

_____ _____

Applicant's Signature **Date**

_____ _____

Owner's Signature **Date**

FOR OFFICIAL USE ONLY

Approved ( ) Permit #_____ Fee Received $_____

Not Approved ( ) Reason_____

Variance Requested: Yes ( ) No ( ) Type Required: ( ) Area ( ) Use

Code Enforcement Officer_____

Date_____

Deck Address:

Deck Spec Sheet

Height of Deck from Grade ☐ Inches

Joint Size (2 x 8" min.) ☐

Actual Joist Span ☐

Longest span from ledger to beam or beam to beam

Is the Joist going to cantilever ☐ Yes ☐ No

Spacing of Floor Joists (Check One)

☐ 16" On-Center

☐ 24" On-Center

☐ Other: _____

If Yes how far is cantilever ☐ Cantilever shall be 2 feet or less

Beam Size: ☐

Beam Span ☐

(longest Span from post to post)

Beam Is Check One: ☐ Double ☐ Triple

Check One:

☐ 6 x 6" Post

☐ 6 x 4" Post

Check One:

☐ Notched Post

☐ Post Cap Connectors

☐ Deck will be attached to the house/structure

☐ Deck will NOT be attached to the house/structure

Size of Ledger Board ☐

Lag Screw Size ☐

Lag Screw Spacing ☐

Footer Depth ☐

If deck is attached to structure footers must Extend a minimum of 42" below grade

Decking Board to be used (check One)

☐ 5/4 P.T. Decking Board

☐ 2 x 6 P.T. Decking Board

☐ Composite Decking (All Types)

☐ Other: _____

If 30" or more above adjacent grade/surface, the deck shall have guardrails

Height of Deck Guardrails ☐ Inches

(Min. height of guardrail is 36 inches from deck surfaces)

Will the deck have stairs ☐ Yes ☐ No

Gripable Handrail is required for all stairs that have a rise of more than 30"

Gripable Handrail Height (34" to 38" from tread Rising) ☐

If Yes:

Stairway Width ☐

Tread Depth (9" Min) ☐

Riser Height (8 1/4" Max) ☐

Closed Risers required on all stairs

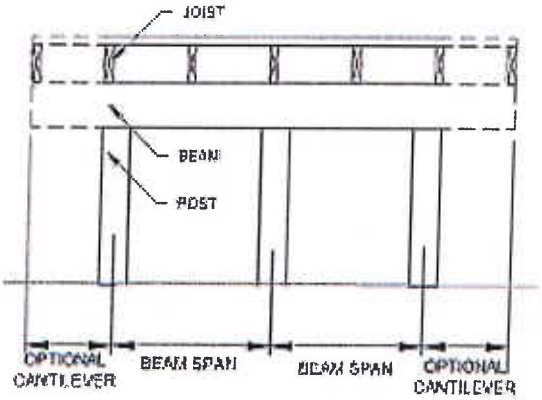

DROPPED BEAM

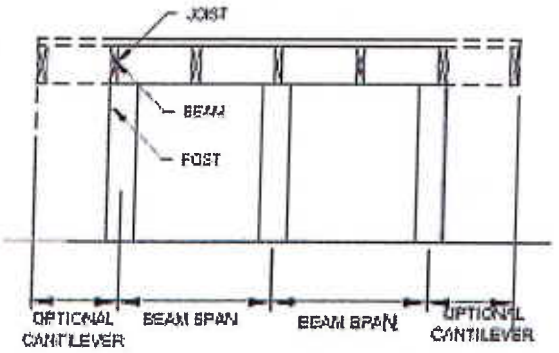

FLUSH BEAM

FIGURE R507.5
TYPICAL DECK JOIST SPANS

TABLE R507.5
DECK BEAM SPAN LENGTHS[a, b, g] (feet - inches)

SPECIES[c]	SIZE[d]	DECK JOIST SPAN LESS THAN OR EQUAL TO: (feet)						
		6	8	10	12	14	16	18
Southern pine	1 – 2 × 6	4-11	4-0	3-7	3-3	3-0	2-10	2-8
	1 – 2 × 8	5-11	5-1	4-7	4-2	2-10	3-7	3-5
	1 – 2 × 10	7-0	6-0	5-5	4-11	4-7	4-3	4-0
	1 – 2 × 12	8-3	7-1	6-4	5-10	5-5	5-0	4-9
	2 – 2 × 6	6-11	5-11	5-4	4-10	4-6	4-3	4-0
	2 – 2 × 8	8-9	7-7	6-9	6-2	5-9	5-4	5-0
	2 – 2 × 10	10-4	9-0	8-0	7-4	6-9	6-4	6-0
	2 – 2 × 12	12-2	10-7	9-5	8-7	8-0	7-6	7-0
	3 – 2 × 6	8-2	7-5	6-8	6-1	5-8	5-3	5-0
	3 – 2 × 8	10-10	9-6	8-6	7-9	7-2	6-8	6-4
	3 – 2 × 10	13-0	11-3	10-0	9-2	8-6	7-11	7-6
	3 – 2 × 12	15-3	13-3	11-10	10-9	10-0	9-4	8-10
Douglas fir-larch[e], hem-fir[e], spruce-pine-fir[e], redwood, western cedars, ponderosa pine[f], red pine[f]	3 × 6 or 2 – 2 x 6	5-5	4-8	4-2	3-10	3-6	3-1	2-9
	3 × 8 or 2 – 2 × 8	6-10	5-11	5-4	4-10	4-6	4-1	3-8
	3 × 10 or 2 – 2 × 10	8-4	7-3	6-6	5-11	5-6	5-1	4-8
	3 × 12 or 2 – 2 × 12	9-8	8-5	7-6	6-10	6-4	5-11	5-7
	4 × 6	6-5	5-6	4-11	4-6	4-2	3-11	3-8
	4 × 8	8-5	7-3	6-6	5-11	5-6	5-2	4-10
	4 × 10	9-11	8-7	7-8	7-0	6-6	6-1	5-8
	4 × 12	11-5	9-11	8-10	8-1	7-6	7-0	6-7
	3 – 2 × 6	7-4	6-8	6-0	5-6	5-1	4-9	4-6
	3 – 2 × 8	9-8	8-6	7-7	6-11	6-5	6-0	5-8
	3 – 2 × 10	12-0	10-5	9-4	8-6	7-10	7-4	6-11
	3 – 2 × 12	13-11	12-1	10-9	9-10	9-1	8-6	8-1

For SI: 1 inch = 25.4 mm, 1 foot = 304.8 mm, 1 pound per square foot = 0.0479 kPa, 1 pound = 0.454 kg.

a. Ground snow load, live load = 40 psf, dead load = 10 psf, L/Δ = 360 at main span, L/Δ = 180 at cantilever with a 220-pound point load applied at the end.

b. Beams supporting deck joists from one side only.

c. No. 2 grade, wet service factor.

d. Beam depth shall be greater than or equal to depth of joists with a flush beam condition.

e. Includes incising factor.

f. Northern species. Incising factor not included.

g. Beam cantilevers are limited to the adjacent beam's span divided by 4.

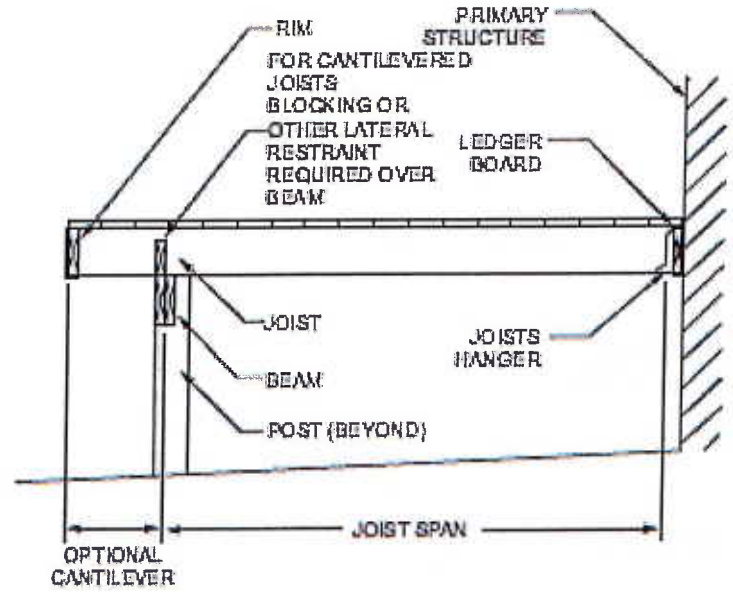

CANTILEVERED JOISTS WITH DROPPED BEAM

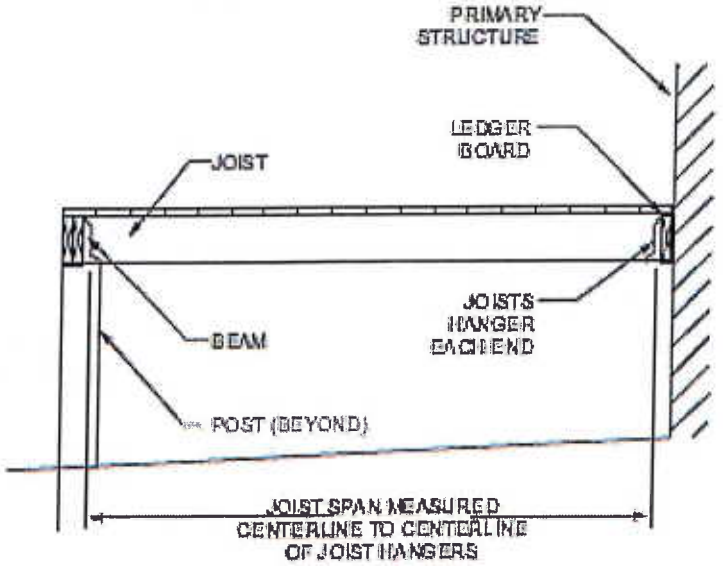

JOISTS WITH FLUSH BEAM

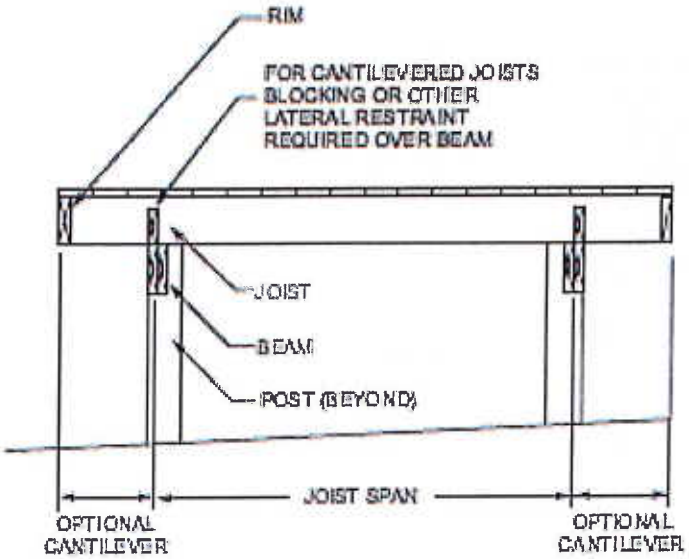

JOISTS ON FREE-STANDING DECK WITH DROPPED BEAM

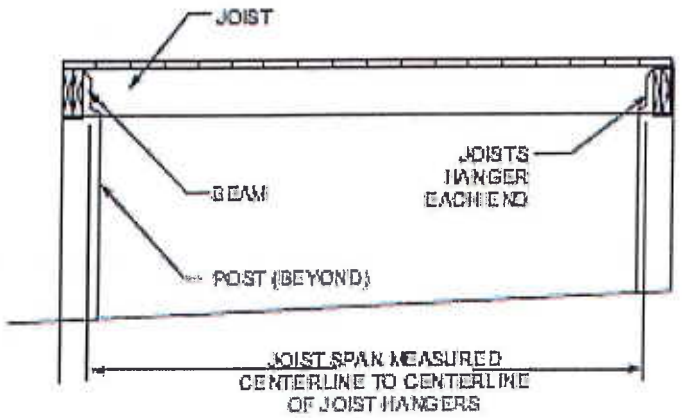

JOISTS ON FREE-STANDING DECK WITH FLUSH BEAM

FIGURE R507.6
TYPICAL DECK JOIST SPANS

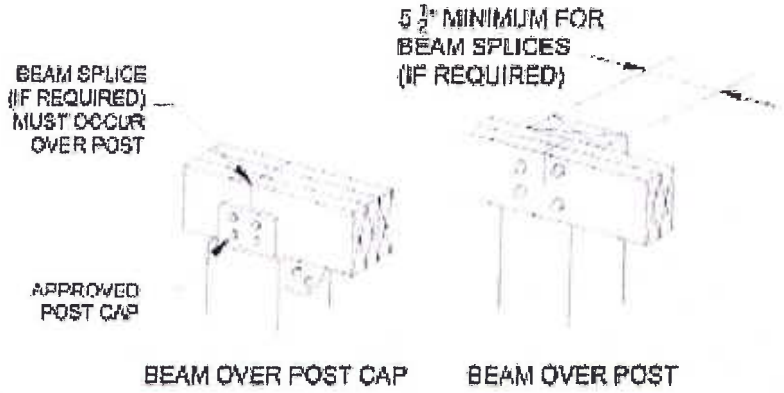

For SI: 1 inch = 25.4 mm.

FIGURE R507.5.1(1)
DECK BEAM TO DECK POST

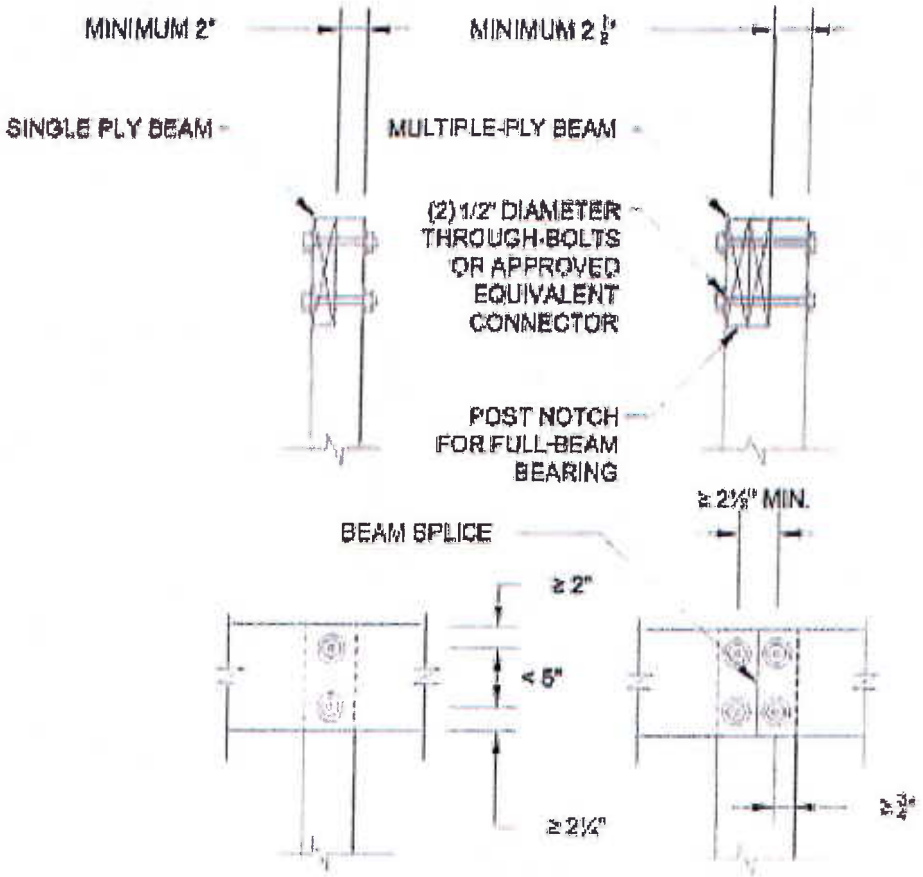

For SI: 1 inch = 25.4 mm.

FIGURE R507.5.1(2)
NOTCHED POST-TO-BEAM CONNECTION

TABLE R507.6
DECK JOIST SPANS FOR COMMON LUMBER SPECIES (ft. - in.)

SPECIES[a]	SIZE	ALLOWABLE JOIST SPAN[b]			MAXIMUM CANTILEVER[c, f]		
		SPACING OF DECK JOISTS (inches)			SPACING OF DECK JOISTS WITH CANTILEVERS[f] (inches)		
		12	16	24	12	16	24
Southern pine	2 × 6	9-11	9-0	7-7	1-3	1-4	1-6
	2 × 8	13-1	11-10	9-8	2-1	2-3	2-5
	2 × 10	16-2	14-0	11-5	3-4	3-6	2-10
	2 × 12	18-0	16-6	13-6	4-6	4-2	3-4
Douglas fir-larch[d], hem-fir[d] spruce-pine-fir[d],	2 × 6	9-6	8-8	7-2	1-2	1-3	1-5
	2 × 8	12-6	11-1	9-1	1-11	2-1	2-3
	2 × 10	15-8	13-7	11-1	3-1	3-5	2-9
	2 × 12	18-0	15-9	12-10	4-6	3-11	3-3
Redwood, western cedars, ponderosa pine[e], red pine[e]	2 × 6	8-10	8-0	7-0	1-0	1-1	1-2
	2 × 8	11-8	10-7	8-8	1-8	1-10	2-0
	2 × 10	14-11	13-0	10-7	2-8	2-10	2-8
	2 × 12	17-5	15-1	12-4	3-10	3-9	3-1

For SI: 1 inch = 25.4 mm, 1 foot = 304.8 mm, 1 pound per square foot = 0.0479 kPa, 1 pound = 0.454 kg.

a. No. 2 grade with wet service factor.

b. Ground snow load, live load = 40 psf, dead load = 10 psf, L/Δ = 360.

c. Ground snow load, live load = 40 psf, dead load = 10 psf, L/Δ = 360 at main span, L/Δ = 180 at cantilever with a 220-pound point load applied to end.

d. Includes incising factor.

e. Northern species with no incising factor.

f. Cantilevered spans not exceeding the nominal depth of the joist are permitted.

TABLE R507.7
MAXIMUM JOIST SPACING FOR DECKING

DECKING MATERIAL TYPE AND NOMINAL SIZE	MAXIMUM ON-CENTER JOIST SPACING	
	Decking perpendicular to joist	Decking diagonal to joist[a]
1¼-inch-thick wood	16 inches	12 inches
2-inch-thick wood	24 inches	16 inches
Plastic composite	In accordance with Section R507.2	In accordance with Section R507.2

For SI: 1 inch = 25.4 mm, 1 foot = 304.8 mm, 1 degree = 0.01745 rad.

a. Maximum angle of 45 degrees from perpendicular for wood deck boards.

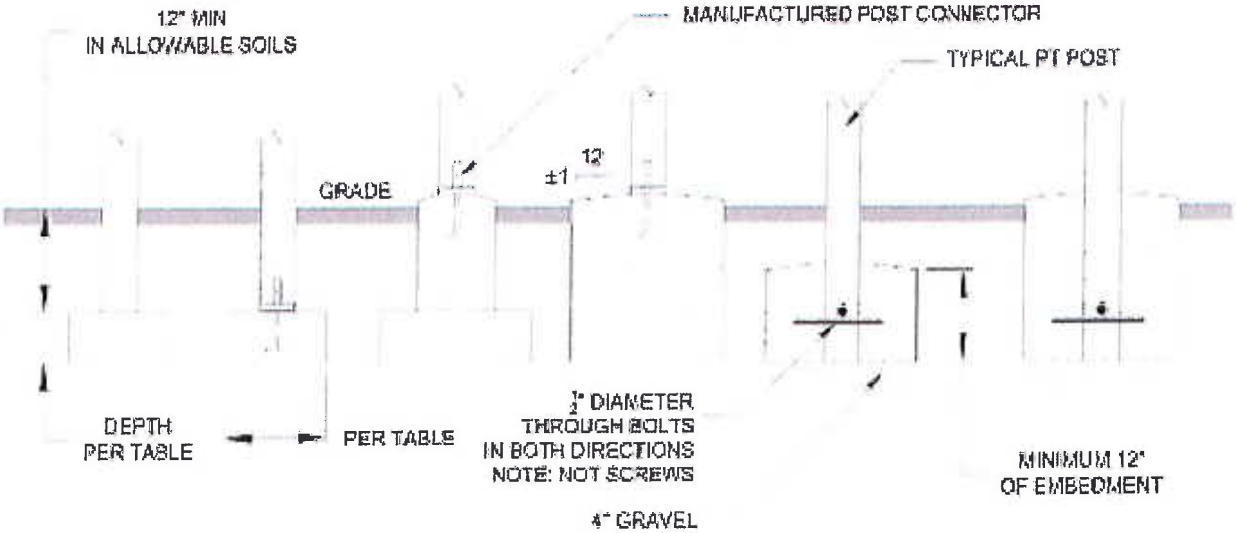

NOTE:
POSTS MUST BE CENTERED ON OR IN FOOTING

For SI: 1 inch = 25.4 mm.